Dart Aerospace Ltd.
1270 Aberdeen St
Hawkesbury, ON
K6A 1K7
Canada

Tel (613) 632-5200
Fax 613 632-5246

D3401-041
Job Sheet 193522

Part No: D3401-041 **Job Qty:** 2 pcs
Part Name: Tow Cap Assembly

Part Weight: 0 lbs **Status:** New **Priority:** Medium
Job Created: 4/16/19 **Job Tracking No:**
Due Date: ~~4/30/19~~ May 15 **Created By:** Marie Lajeunesse
Type: ~~Stock~~ SOLD **Description:**
Note: DWG REV B IPP A 05.09.01 New issue KJ/JLM
Ship Via:

Bill of Materials

Job Routing

Op No	Operation	Qty	Start Date	Due Date	Standard Setup Hrs	Standard Run Hrs	Workcenter / Supplier	Lead Time	Sign-off
100	Bandsaw - 1	2 pcs		4/30/19	0.00	0.10	Bandsaw - 1		
110	Doosan - B4B	2 pcs		4/30/19	0.22	0.89	Doosan - 1 - B4B		DAS 5 9-89
120	QC 2	2 pcs		4/30/19	0.00	0.00	QC 2 - 1		
							QC 2 - 12		
							QC 2 - 14		
							QC 2 - 17		
							QC 2 - 19		
							QC 2 - 2		DAS 5 9-89
							QC 2 - 20		
							QC 2 - 22		
							QC 2 - 23		
							QC 2 - 25		
							QC 2 - 32		
							QC 2 - 33		
							QC 2 - 35		
							QC 2 - 39		
							QC 2 - 4		
							QC 2 - 40		
							QC 2 - 44		
							QC 2 - 45		
							QC 2 - 48		
							QC 2 - 49		
							QC 2 - 50		
							QC 2 - 51		
							QC 2 - 52		
							QC 2 - 57		
							QC 2 - 62		
							QC 2 - 63		
							QC 2 - 8		
							QC 2 - 66		

DART AEROSPACE
Container No: S178710
Part: D3401 – 041
Job No: 193522
Serial No/Batch: S178710
Revision:
Inspector:
Exp Date:
Instructions: Various STC's
Date: 05/07/19

Dart Aerospace Ltd.
1270 Aberdeen Street
Hawkesbury, ON K64 1K7
CANADA
TEL.: 1 613 632 – 5200
Email: sales@dartaero.com
www.dartaerospace.com

				QC 2 - 64	
				QC 2 - 65	
				QC 2 - 5	
				QC 2 - 71	
130 **HAAS 4 Axis - B4B**	2 pcs	4/30/19	0.00 0.00	HAAS - 1 - B4B	
				HAAS - 2 - B4B	
				HAAS - 3 - B4B	
				HAAS - 4 - B4B	LLL. 2019/05/13
135 **QC 2**	2 pcs	4/30/19	0.00 0.00	QC 2 - 1	
				QC 2 - 12	
				QC 2 - 14	
				QC 2 - 17	
				QC 2 - 19	
				QC 2 - 2	
				QC 2 - 20	
				QC 2 - 22	
				QC 2 - 23	
				QC 2 - 25	
				QC 2 - 32	
				QC 2 - 33	
				QC 2 - 35	
				QC 2 - 39	
				QC 2 - 4	
				QC 2 - 40	
				QC 2 - 44	
				QC 2 - 45	
				QC 2 - 48	
				QC 2 - 49	
				QC 2 - 50	
				QC 2 - 51	
				QC 2 - 52	
				QC 2 - 57	
				QC 2 - 62	
				QC 2 - 63	
				QC 2 - 8	
				QC 2 - 66	
				QC 2 - 64	LLL 2019/05/13
				QC 2 - 65	
				QC 2 - 5	
				QC 2 - 71	
140 **QC 8**	2 pcs	4/30/19	0.00 0.00	QC 8 - 12	
				QC 8 - 14	2019/05/13
				QC 8 - 17	
				QC 8 - 20	
				QC 8 - 25	
				QC 8 - 3	
				QC 8 - 32	
				QC 8 - 33	
				QC 8 - 35	
				QC 8 - 39	
				QC 8 - 4	
				QC 8 - 44	
				QC 8 - 45	
				QC 8 - 49	
				QC 8 - 58	
				QC 8 - 8	
				QC 8 - 9	
				QC 8 - 68	
				QC 8 - 67	

					QC 8 - 1 (A)	
					QC 8 - 47	
					QC 8 - 40	
					QC 8 - 52	
					QC 8 - 23	
150	**Small Fab - 2 - B4B**	2 pcs	4/30/19	0.00 0.47	Small Fab - 1 - B4B	
					Small Fab - 2 - B4B	
					Small Fab - 3 - B4B	DAS 30 9-89 MAY 29 2019
					Small Fab - 4 - B4B	MAY 15 2019
					Small Fab - 5 - B4B	
					Small Fab - 6 - B4B	
					Small Fab - 7 - B4B	
160	**QC 5**	2 pcs	4/30/19	0.00 0.00	QC 5 - 10	
					QC 5 - 12	
					QC 5 - 17	
					QC 5 - 18	
					QC 5 - 19	
					QC 5 - 22	
					QC 5 - 24	
					QC 5 - 3	
					QC 5 - 43	
					QC 5 - 49	
					QC 5 - 51	
					QC 5 - 58	
					QC 5 - 68	
					QC 5 - 9	
					QC 5 - 50	
					QC 5 - 30	DAS
					QC 5 - 40	MAY 30 2019 40 9-89
170	**Handfinish - 1-1 Chemical-B4B**	2 pcs	4/30/19	0.00 0.17	Handfinish - 1 - 1 - B4B	
					Handfinish - 1 - 2 - B4B	
					Handfinish - 1 - 3 - B4B	JUN 03 2019
					Handfinish - 1 - 4 - B4B	
					Handfinish - 1 - 5 - B4B	
					Handfinish - 1 - 6 - B4B	
					Handfinish - 1 - 7 - B4B	
					Handfinish - 1 - 8 - B4B	
					Handfinish - 1 - 9 - B4B	
					Handfinish - 1 - 10 - B4B	
					Handfinish - 1 - 11 - B4B	
					Handfinish - 1 - 12 - B4B	
					Handfinish - 1 - 13 - B4B	
					Handfinish - 1 - 14 - B4B	
					Handfinish - 1 - 15 - B4B	
					Handfinish - 1 - 16 - B4B	
					Handfinish - 1 - 17 - B4B	
					Handfinish - 1 - 18 - B4B	
					Handfinish - 1 - 19 - B4B	
					Handfinish - 1 - 20 - B4B	
					Handfinish - 1 - 21 -	

					B4B	
					Handfinish - 1 - 22 - B4B	
180	**Powdercoat - 1 White Gl(A)-B4B** N 175459.	2 pcs	4/30/19	0.00 0.06	Powdercoat - 1 - B4B	
					Powdercoat - 2 - B4B	
	START: 3:10 OVT: 370° FINISH: 3:40				Powdercoat - 3 - B4B	BK 19-6-5.
					Powdercoat - 4 - B4B	
190	**QC 3**	2 pcs	4/30/19	0.00 0.00	QC 3 - 10	
					QC 3 - 13	
					QC 3 - 15	ML 19-6-6
					QC 3 - 17	
					QC 3 - 18	
					QC 3 - 2	
					QC 3 - 28	
					QC 3 - 3	
					QC 3 - 30	
					QC 3 - 34	
					QC 3 - 36	
					QC 3 - 41	
					QC 3 - 51	
					QC 3 - 58	
					QC 3 - 59	
					QC 3 - 68	
					QC 3 - 9	
					QC 3 - 40	
					QC 3 - 19	
195	**Handfinish - 4-1-Assembly-B4B**	2 pcs	4/30/19	0.00 0.17	Handfinish - 4 - 1 - B4B	ML 19-6-6
					Handfinish - 4 - 10 - B4B	
					Handfinish - 4 - 11 - B4B	
					Handfinish - 4 - 12 - B4B	
					Handfinish - 4 - 13 - B4B	
					Handfinish - 4 - 14 - B4B	
					Handfinish - 4 - 15 - B4B	
					Handfinish - 4 - 2 - B4B	
					Handfinish - 4 - 3 - B4B	
					Handfinish - 4 - 4 - B4B	
					Handfinish - 4 - 5 - B4B	
					Handfinish - 4 - 6 - B4B	
					Handfinish - 4 - 7 - B4B	
					Handfinish - 4 - 8 - B4B	
					Handfinish - 4 - 9 - B4B	
200	**QC 5**	2 pcs	4/30/19	0.00 0.00	QC 5 - 10	
					QC 5 - 12	
					QC 5 - 17	
					QC 5 - 18	
					QC 5 - 19	
					QC 5 - 22	
					QC 5 - 24	
					QC 5 - 3	
					QC 5 - 43	
					QC 5 - 49	
					QC 5 - 51	
					QC 5 - 58	
					QC 5 - 68	

				QC 5 - 9	
				QC 5 - 50	
				QC 5 - 30	DAS
				QC 5 - 40	JUN 0 6 2019 40
210 **Packaging 3-1 - Stock - B4B**	2 pcs	4/30/19	0.00 0.00	Packaging 3 - 1 - B4B	9-89
				Packaging 3 - 2 - B4B	
				Packaging 3 - 3 - B4B	
				Packaging 3 - 4 - B4B	
				Packaging 3 - 5 - B4B	
				Packaging 3 - 6 - B4B	
				Packaging 3 - 7 - B4B	
				Packaging 3 - 8 - B4B	
				Packaging 3 - 9 - B4B	
				Packaging 3 - 10 - B4B	
				Packaging 3 - 11 - B4B	
				Packaging 3 - 12 - B4B	
				Packaging 3 - 13 - B4B	
				Packaging 3 - 14 - B4B	
				Packaging 3 - 15 - B4B FP.001	M 19-6-6
				Packaging 3 - 16 - B4B	
				Packaging 3 - 17 - B4B	
				Packaging 3 - 18 - B4B	
				Packaging 3 - 19 - B4B	
				Packaging 3 - 20 - B4B	
				Packaging 3 - 21 - B4B	
				Packaging 3 - 22 - B4B	
				Packaging 3 - 23 - B4B	
				Packaging 3 - 24 - B4B	
				Packaging 3 - 25 - B4B	
				Packaging 3 - 26 - B4B	
				Packaging 3 - 27 - B4B	
				Packaging 3 - 28 - B4B	
				Packaging 3 - 29 - B4B	
				Packaging 3 - 30 - B4B	
				Packaging 3 - 31 - B4B	
				Packaging 3 - 32 - B4B	
				Packaging 3 - 33 - B4B	
				Packaging 3 - 34 - B4B	
				Packaging 3 - 35 - B4B	
				Packaging 3 - 36 - B4B	
220 **QC 21 - SA**	2 pcs	4/30/19	0.00 0.00	QC 21 - SA - 21	DAS 21 9-89
				QC 21 - SA - 70	
				QC 21 - SA - 53	

JUN 0 6 2019

Part Op Descriptions:
100 - (Bandsaw) Cut Blanks 4.20" Long
110 - (Doosan Lathe) Turn as per Folio FA532 & Dwg D3401 Folio Rev: AA Dwg Rev: D
120 - (QC2- Inspect parts off machine FAI/FAIB)
130 - (HAAS CNC Vertical Machine) Machine as per Folio FA532 and Dwg D3401 Dwg Rev: B Folio Rev: AA
Identify as D3401-1 Deburr & Buff rad as per Dwg D3401
135 - (QC2- Inspect parts off machine FAI/FAIB)
140 - (QC8- Inspect parts - second check)
150 - (Small Fab) Drill and c'sink using DT8782 as per Dwg D3401
160 - (QC5- Inspect part completeness to step on W/O)
170 - (Chemical Conversion Coat per QSI005 4.1)
180 - (White Gloss(Ref:4.3.5.1) per QSI005 4.3-Alum) START TIME: _____ FINISH TIME: _____
190 - (QC3- Inspect Part Finish)
195 - (Assemble as per dwg)
200 - (QC5- Inspect part completeness to step on W/O)
210 - (Identify as per dwg & Stock Location:_____) LOCATION : FP001
220 - (QC21- Final Inspection - Work Order Release)

MAT used

G16214
1- FM 137844.0 -71.770
2- FM 135094.0 -71.062
5076014 +.354

Job BOM

Part / Item	Component Name	Quantity	Operation	Container
M6061T6R3.500	6061 Round Bar 3.50	.7000 ft (.35 ea)	100-Bandsaw - 1	
NAS1330C3KB116	Rivnut	8 Ea (4 ea)	195-Handfinish - 4-1-Assembly-B4B	

5036487 x16 .398
5076014x29

Job Allocations

Operation	Component Part	Required	Inventory	Allocated
100-Bandsaw - 1	M6061T6R3.500	1	12	0
195-Handfinish - 4-1-Assembly-B4B	NAS1330C3KB116	8	78	0

Part Specifications

Specifications could not be found.

Plex 4/16/19 11:00 AM Dart.lajeunesse.marie

DART AEROSPACE LTD	Work Order:	193522
Description: Toe Cap	Part Number:	D3401-1
Inspection Dwg: D3401 **Rev:** B		Page 1 of 1

FIRST ARTICLE INSPECTION CHECKLIST

[X] First Article [ ] Prototype

Drawing Dimension	Tolerance	Actual Dimension	Accept	Reject	Method of Inspection	Comments
Ø3.430	+/-0.005	3.431	✓		caliper	
Ø3.225	+0.000/-0.005	3.221	✓		inside micrometer	
1.31	+/-0.030	1.292	✓		Caliper	
2.08	+/-0.030	2.087	✓		Deep gage	
2.45	+/-0.030	2.446	✓		high gage	
4.00	+/-0.030	4.001	✓		caliper	
0.50	+/-0.030	.496	✓		Vernier	
R0.75	+/-0.030	R.750 OK!	✓		Gabarit	

M.M. 2019/05/11

Measured by:		Audited by:		Prototype Approval:	N/A
Date:	5/07	Date:	19/05/03	Date:	N/A

Rev	Date	Change		Revised by	Approved
A	06.06.02	New Issue	P/O D3401-041	KJ/JLM	

Entered: _____ Date: _____

WORK ORDER NON-CONFORMANCE / ROUTE UPDATE

DART AEROSPACE

NCR No.

Route update only ☐

Job: 193522

Part No. D3401-04

DISPOSITION

Rework ☐
Scrap ☐
Use-as-is ☒

DEPARTMENT/PROCESS

Skid-tube ☐ Cross tube ☐ Eng. (Non-AW) ☐ Engineering ☐
Machining ☐ Small Fab ☐ Prod. Eng. Coor. ☐ Water Jet ☐
Large Fab ☐ Finishing ☐ Rec/Store/Packaging ☐ Supplier ☐
Quality ☐

Date :

Sequence #:

QTY Affected :

MRB (QSI042)

INSP 12 14/5/13

Description Work Order Deviation

I.D. $\phi 3.225^{+0.000}_{-0.005}$ is $\phi 3.227$.

Disposition

Acceptable.

Completed By

14/5/13

Lead hand / Supervisor

QC / QA Coordinator

DAS
68
9-89
MAY 29 2019

Root Cause

Operator ☐
Manufacturing Process ☐
Equip/Tooling ☐
Handling/Presservation ☐
Material ☐
Product Improvement ☐
Process Improvement ☐
Human Factors ☐

FAULT CATEGORY

☐ Pressure/Forced
☐ Bending
☐ Crushing
☐ Cracks
☐ Crimp/Kink/Ripple/Wave/Twist
☐ Marks/Chatter
☐ Mislabeled
☐ Contamination
☐ Misaligned/off center
☐ BOM/Route
☐ Broken/Damage/Defect
☐ Incomplete/Unclear Instructions
☐ Drill Holes
☐ Fit/Function
☐ Power Loss/Surge
☐ Folio/Program
☐ Grain Direction
☐ Weld
☐ Wrong Stock Pulled
☐ Out of Sequence
☐ Off-set/Set-up
☐ Positioned Wrong
☐ Outside Tolerance
☐ Drawing
☐ Finish
☐ Part Lost/Missing
☐ Misread

Other/Details:

Copyright © 2005 by DART AEROSPACE USA, INC.
THIS DOCUMENT IS PRIVATE AND CONFIDENTIAL AND IS SUPPLIED ON THE EXPRESS CONDITION THAT IT IS NOT TO BE USED FOR ANY PURPOSE OR COPIED OR COMMUNICATED TO ANY OTHER PERSON WITHOUT WRITTEN PERMISSION FROM DART AEROSPACE USA, INC.

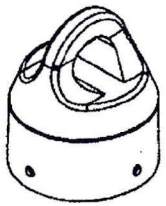

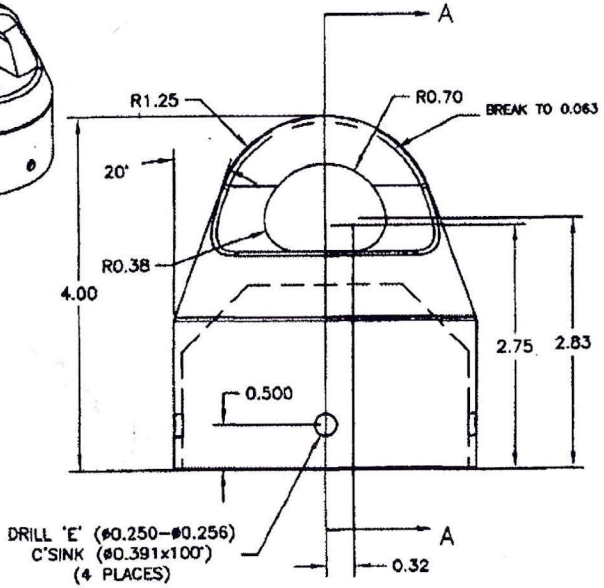

D3401-1 TOW CAP

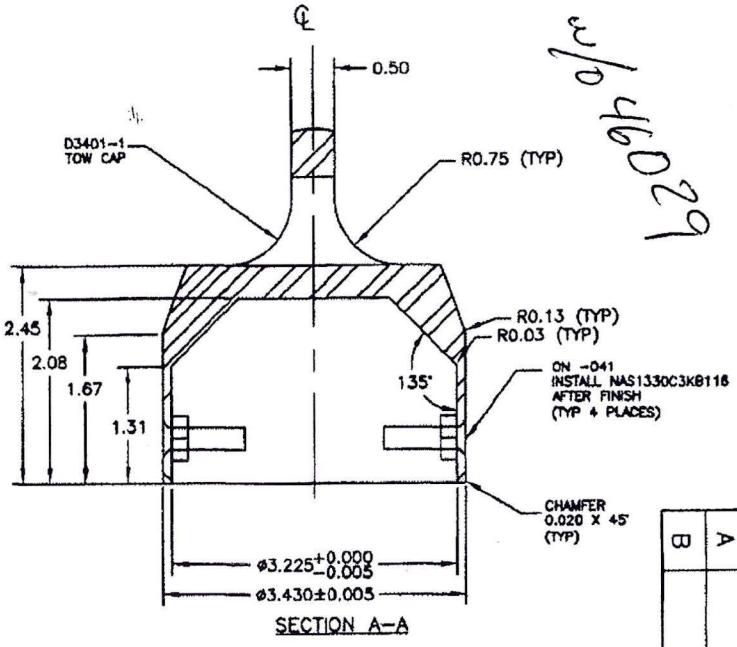

SECTION A–A

D3401-1/-041 TOW CAP

w/o 46029

D3401-1 TOW CAP

1) MATERIAL: MAKE FROM ALUMINUM 6061-T6 Ø3.500 ROUND BAR PER QQ-A-225/8 OR AMS-QQ-A-200/8 (REF. DART SPEC M6061T6R3.5000)
2) BREAK ALL UNMARKED SHARP EDGES 0.005 TO 0.015
3) ALL DIMENSIONS ARE IN INCHES
4) ALL TOLERANCES ARE PER DART QSI 018 UNLESS OTHERWISE NOTED

D3401-041 TOW CAP

1) FINISH: ACID ETCH AND ALODINE PER DART QSI 005 4.1
POWDER COAT ASSEMBLY WHITE (4.3.5.1) PER DART QSI 005 4.3

RELEASED
05.08.09

D3401-041 TOW CAP PARTS LIST

QTY	PART NUMBER	DESCRIPTION
1	D3401-1	TOW CAP
4	NAS1330C3KB116	INSERT

A	05.02.24	NEW ISSUE
B	05.06.09	CHAMFER INSIDE,REMOVE RADIUS

DART

DESIGN: PH | DRAWN BY: PH | CHECKED | APPROVED | DATE: 05.06.09

DART AEROSPACE USA, INC.
PORT HADLOCK, WA

DRAWING NO. D3401 | REV. B
TITLE: TOW CAP | SHEET 1 OF 1 | SCALE 1:2